MALE END VIEW (P1)

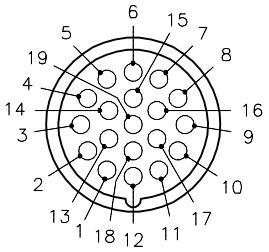

PAIR { 1 = WHITE/BLACK, 2 = BLACK/WHITE }
PAIR { 3 = WHITE/GREEN, 4 = GREEN/WHITE }
PAIR { 5 = WHITE/RED, 6 = DRAIN, 7 = RED/WHITE }
PAIR { 8 = WHITE/ORANGE, 9 = ORANGE/WHITE }
PAIR { 10 = WHITE/BLUE, 11 = BLUE/WHITE }
12 = GREEN/YELLOW
PAIR { 13 = WHITE/BROWN, 14 = BROWN/WHITE }
PAIR { 15 = WHITE/YELLOW, 16 = YELLOW/WHITE }
PAIR { 17 = WHITE/VIOLET, 18 = VIOLET/WHITE }
19 = N/C

M23 connector

FEMALE END VIEW (J1)

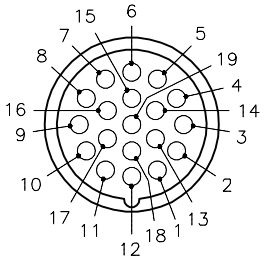

PAIR { 1 = WHITE/BLACK, 2 = BLACK/WHITE }
PAIR { 3 = WHITE/GREEN, 4 = GREEN/WHITE }
PAIR { 5 = WHITE/RED, 6 = DRAIN, 7 = RED/WHITE }
PAIR { 8 = WHITE/ORANGE, 9 = ORANGE/WHITE }
PAIR { 10 = WHITE/BLUE, 11 = BLUE/WHITE }
12 = GREEN/YELLOW
PAIR { 13 = WHITE/BROWN, 14 = BROWN/WHITE }
PAIR { 15 = WHITE/YELLOW, 16 = YELLOW/WHITE }
PAIR { 17 = WHITE/VIOLET, 18 = VIOLET/WHITE }
19 = N/C

M23 connector

WIRING DIAGRAM

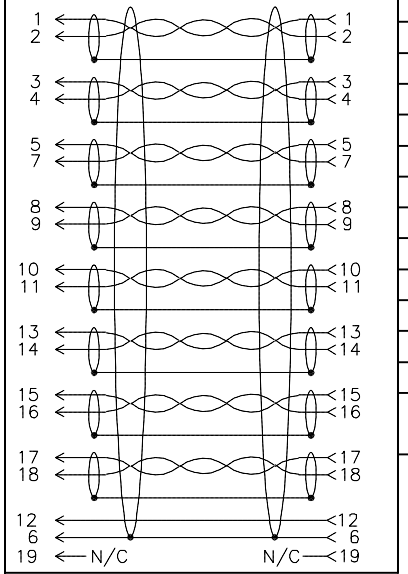

SPECIFICATIONS

CONTACT CARRIER MATERIAL	NYLON or PBT
MOLDED HEAD MATERIAL/COLOR	TPU/BLACK
CONTACT MATERIAL/PLATING	BRASS/GOLD
COUPLING NUT MATERIAL/PLATING	BRASS/NICKEL
RATED CURRENT [A]	9.0 A (PIN 12), 2.0 A (ALL OTHERS)
RATED VOLTAGE [V]	150 V
OUTER JACKET MATERIAL/COLOR	EX60/PLUM
CONDUCTOR INSULATION MATERIAL	XLPE
NUMBER OF CONDUCTORS [AWG]	16x22 AWG, 1x18 AWG GROUND
DRAIN/SHIELD	9x22 AWG/ALUM.-POLYESTER FOIL (PAIRS & OVERALL)
CONDUCTOR ARRANGEMENT	8 SHIELDED TWISTED PAIRS W/DRAIN, 1 GND, 1 DRAIN
TEMPERATURE RANGE	-60°C to +105°C (-76°F to +221°F)
PROTECTION CLASS	IEC IP67
CABLE RATINGS	UL: ITC-ER/PLTC-ER, DIRECT BURIAL, 105C, -60C COLD BEND CSA: CIC, 90C, 300V

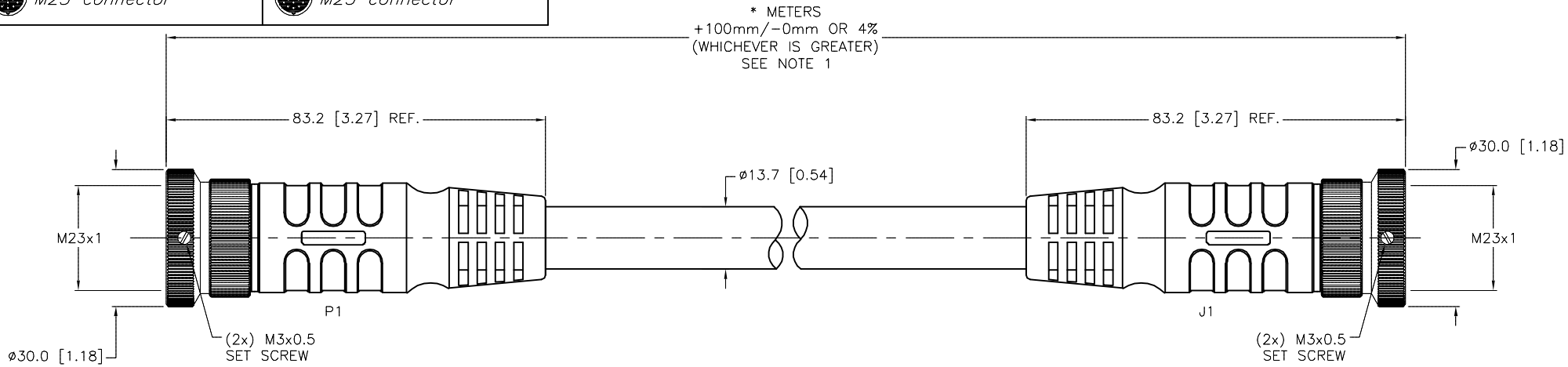

SOURCE DRAWING - FOR REFERENCE ONLY

NOTES:

1. "*" INDICATES CABLE LENGTH IN METERS. CONTACT TURCK TO ORDER SPECIFIC LENGTHS.

REV	DESCRIPTION	BY	DATE	ECO NO.
C	UPDATE ENDVIEW	ER	10/30/19	75385

RELATED DOCUMENTS
1.
2.
3.
4.

3RD ANGLE PROJECTION

THIS DRAWING IS CONFIDENTIAL AND THE PROPERTY OF TURCK INC. USE OF THIS DOCUMENT WITHOUT WRITTEN PERMISSION IS PROHIBITED.

TURCK

3000 CAMPUS DRIVE
MINNEAPOLIS, MN 55441
1-800-544-7769
(763) 553-7300
(763) 553-0708 fax
www.turck.us

MATERIAL: SEE SPECIFICATIONS

FINISH: SEE SPECIFICATIONS

ALL DIMENSIONS DISPLAYED ON THIS DRAWING ARE FOR REFERENCE ONLY

CONTACT TURCK FOR MORE INFORMATION

DRFT: RDS | DATE: 02/06/15
APVD: J.S. | SCALE: 1=1.3

UNIT OF MEASUREMENT
MILLIMETER [INCH]
DO NOT SCALE THIS DRAWING

DESCRIPTION: P-CSML CKML 19-1230XL-*

IDENTIFICATION NO.

REV: C

FILE: 777034676 | SHEET 1 OF 1

Approved 10/30/2019, work order #201986 by T.V.